sanindusa

www.sanindusa.pt

MILLENNIUM
SANITA COMPACTA
LOW LEVEL WC PAN

105022IM01 | **105021IM01**

INSTRUÇÃO DE MONTAGEM ASSEMBLY INTRUCTIONS

1

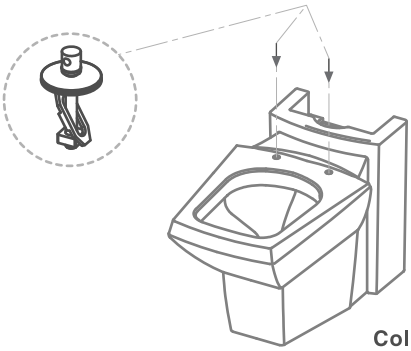

Coloque e fixe os parafusos.
Place and fasten onto the wc pan the toilet seat fastners.

2

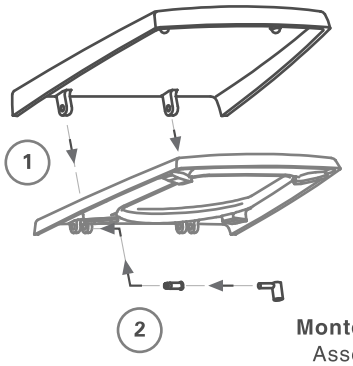

Monte as dobradiças no tampo.
Assemble the toilet seat hinges.

3

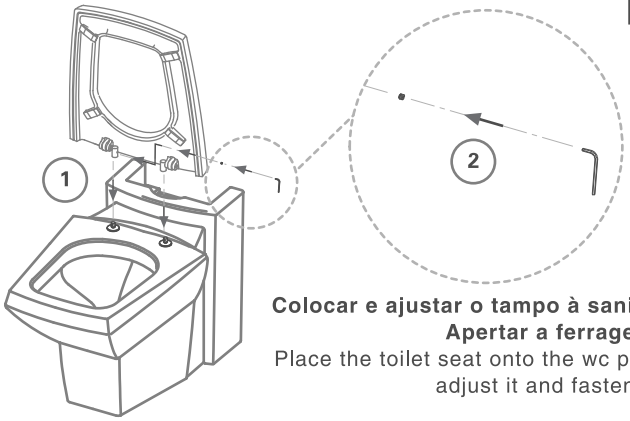

Colocar e ajustar o tampo à sanita. Apertar a ferragem.
Place the toilet seat onto the wc pan, adjust it and fasten it.

4

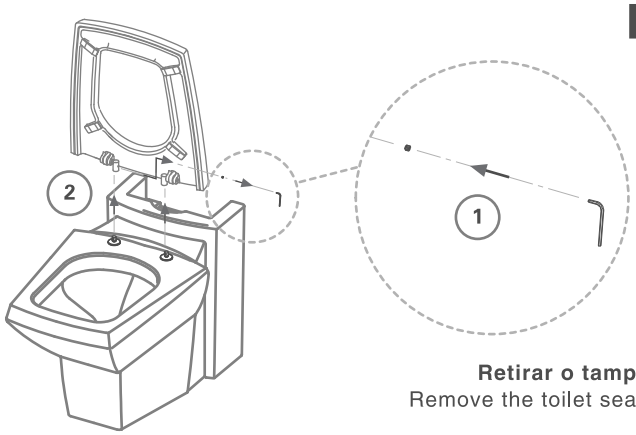

Retirar o tampo
Remove the toilet seat.

5

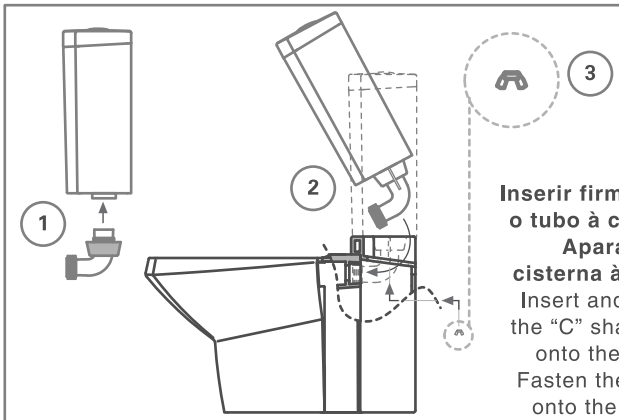

Inserir firmemente o tubo à cisterna. Aparafusar a cisterna à sanita.
Insert and tight fit the “C” shape pipe onto the cistern. Fasten the cistern onto the wc pan.

6

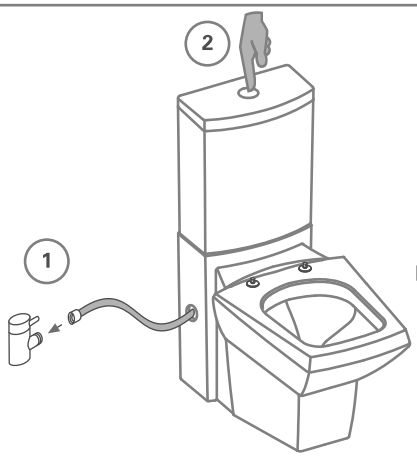

Ensaio de estanquidade. Fora do local de aplicação final.
Watertight test perfomed away from the final instalation place.

7A

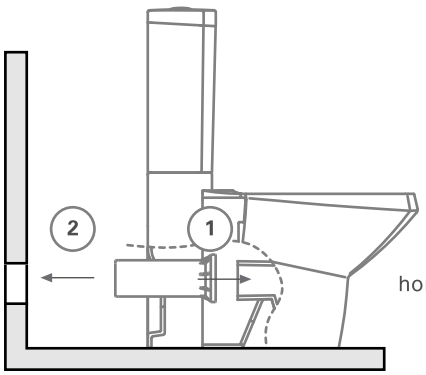

Colocar o tubo horizontal. Colocar a sanita na posição final.
Place and tight fit the horizontal connector pipe. Set the wc pan in its position service.

7B

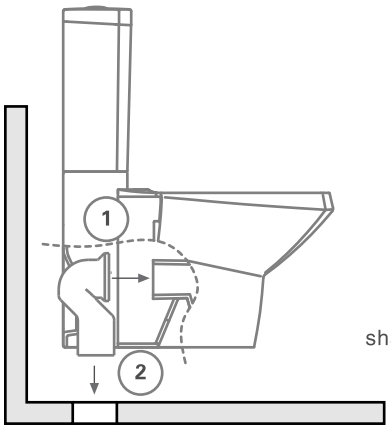

Colocar o sifão. Colocar a sanita na posição final.
Place and tight fit the “p” shape outlet connector pipe. Set the wc pan in its position service.

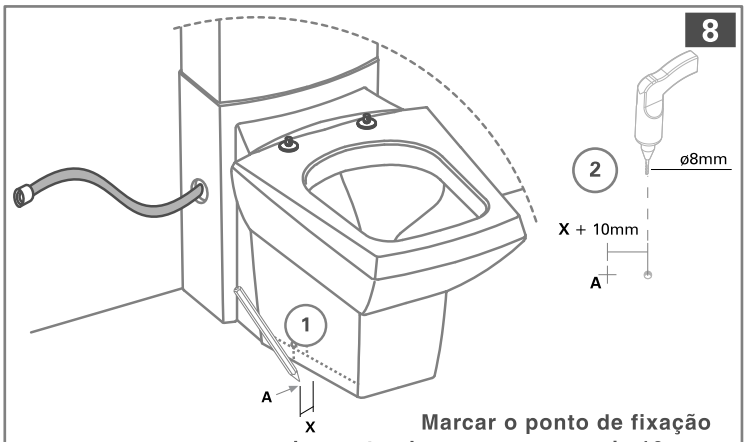

Marcar o ponto de fixação descontando a espessura mais 10mm.
Marc the fixing point, deducing the thickness plus 10mm.

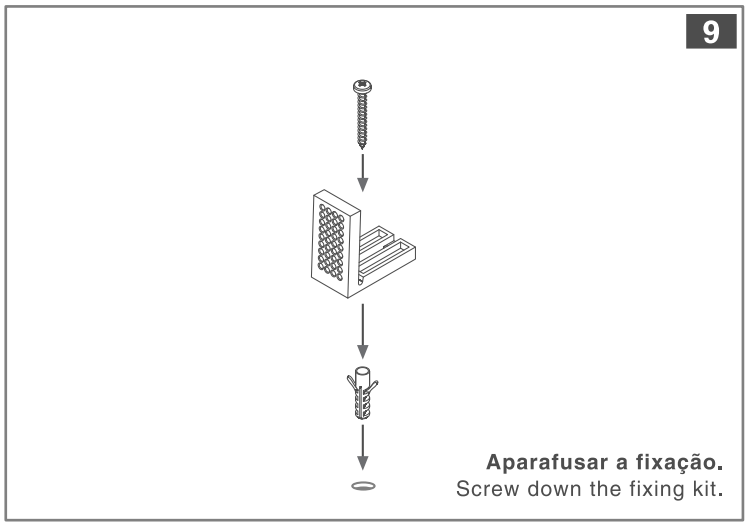

Aparafusar a fixação.
Screw down the fixing kit.

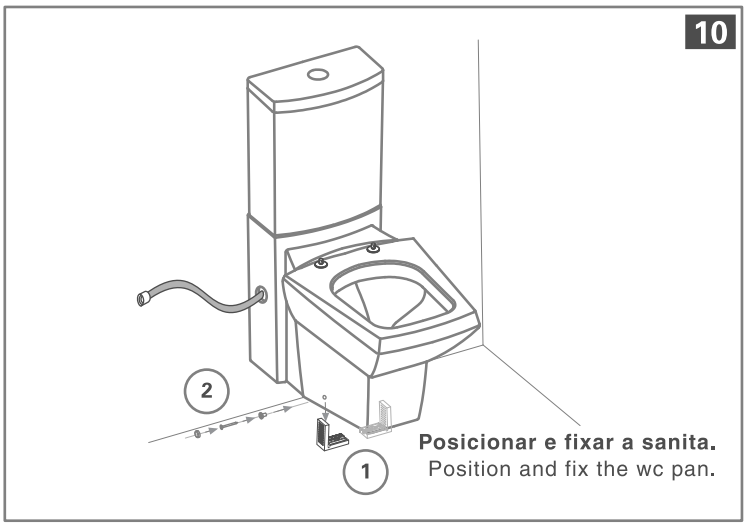

Posicionar e fixar a sanita.
Position and fix the wc pan.

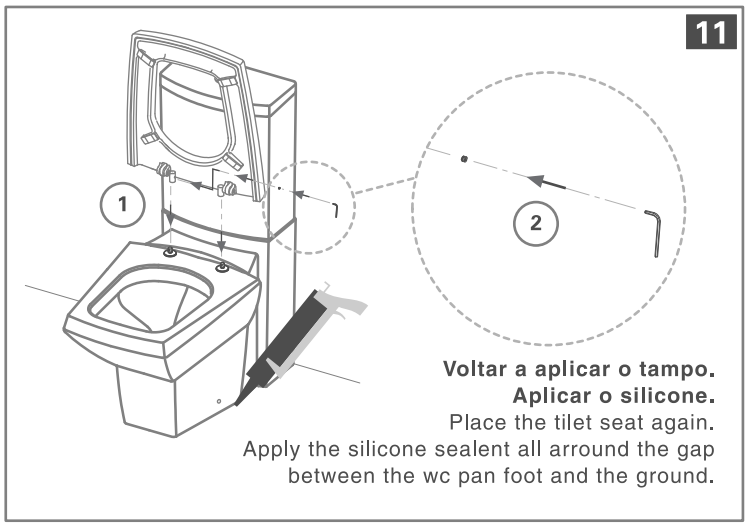

Voltar a aplicar o tampo.
Aplicar o silicone.
Place the tilet seat again.
Apply the silicone sealent all arround the gap between the wc pan foot and the ground.