sanindusa

www.sanindusa.pt

CE

AVEIRO
SANITA COMPACTA
WC BOWL MONOBLOC

103021IM00 **103022IM00**

INSTRUÇÃO DE MONTAGEM ASSEMBLY INSTRUCTIONS

1

Aparafusar a cisterna à sanita.
Fasten the cistern onto the wc pan.

2A

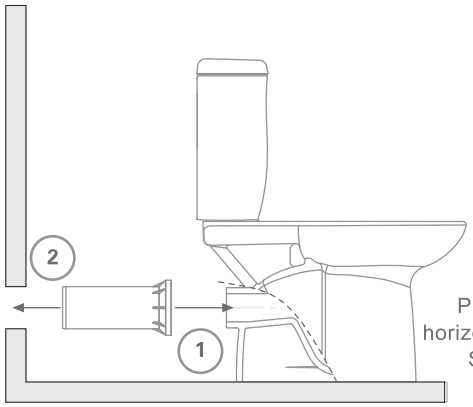

Colocar o tubo horizontal.
Colocar a sanita na posição final.
Place and tight fit the horizontal connector pipe.
Set the wc pan in its posictiuon service.

2B

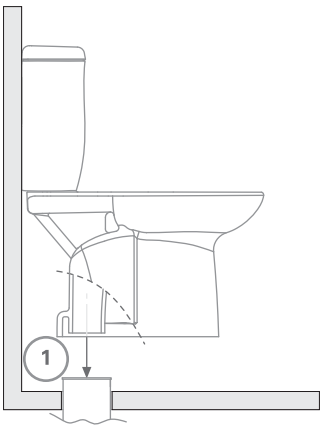

Colocar a sanita na posição final.
Set the wc pan in its position service.

3

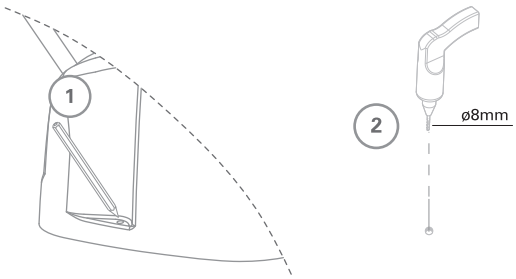

Furar a parede (B,C).
Make the holes in the wall (B,C).

4

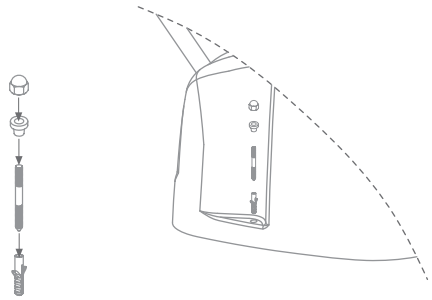

Aparafusar a fixação.
Screw down the fixing kit.

5

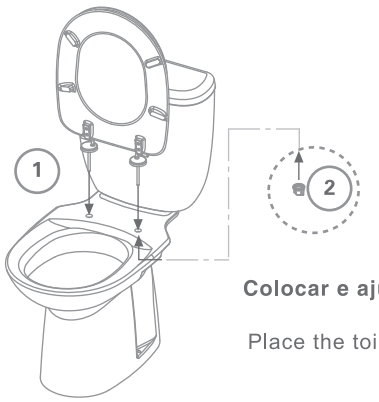

Colocar e ajustar o tampo à sanita.
Apertar a ferragem.
Place the toilet seat onto the wc pan, adjust it and fasten it.

6

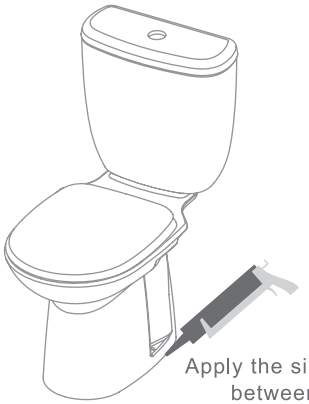

Aplicar o silicone.
Apply the silicone sealent all arround the gap between the wc pan foot and the ground.